SUBMITTAL SHEET

Anemostat®
A MESTEK COMPANY
P.O. BOX 4938 • 1220 WATSONCENTER ROAD • CARSON, CA 90745-4206
(310) 835-7500 • FAX (310) 835-0448
e-mail: airsec@anemostat.com • website: www.anemostat.com

HD35-MS

MEDIUM SECURITY

HEAVY DUTY STEEL GRILLE
with
FIXED LOUVER

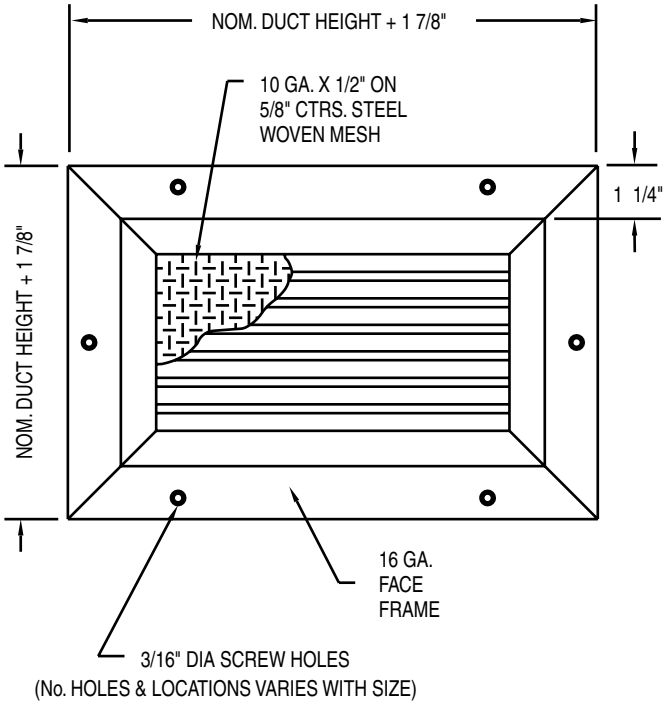

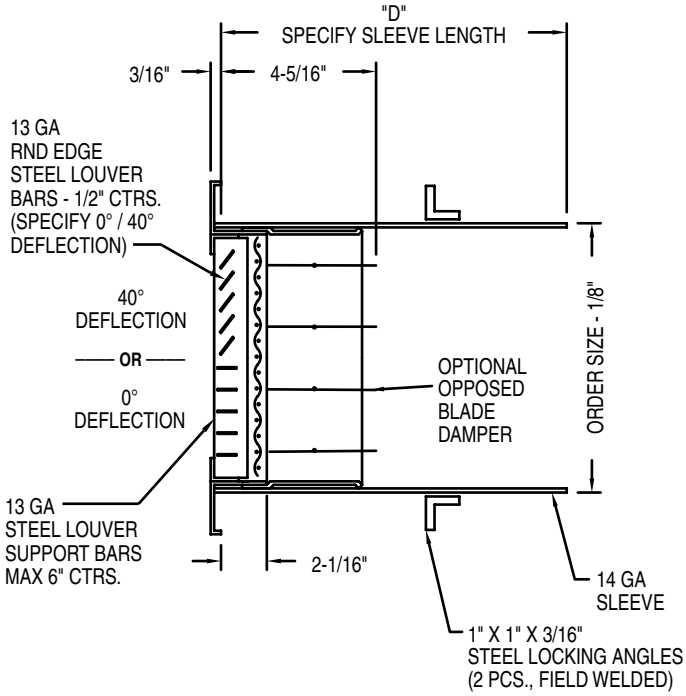

IMPORTANT: It is the specifier's responsibility to properly configure the HVAC system to meet the appropriate level of comfort, safety, security and detention

PRODUCT FEATURES

Face Frame

☐ 16 GA. **(standard)** ☐ 18 GA. (optional)
☐ 14 GA. (optional)

Steel Sleeve** -(optional)

☐ 14 GA. (standard when sleeve is required)
☐ 16 GA. (optional) ☐ 18 GA. (optional)
☐ Other _____

Fixed Louver Bars - 13 GA

☐ Horizontal, 0° Deflection "HS" **(standard)**
☐ Horizontal, 40° Deflection "HD" (optional)
☐ Vertical, 0° Deflection "VS" (optional)
☐ Vertical, 40° Deflection "VD" (optional)

Steel Woven Mesh - 10 GA

☐ 1/2" sq. holes on 5/8" ctrs. **(standard)**
☐ 3/8" sq. holes on 1/2" ctrs. (optional)

Material

☐ Cold Rolled Steel **(standard)**
☐ *Stainless Steel (optional)
☐ *Aluminum (optional)
☐ *Galvanized (optional)
☐ Other _____

*consult factory for availability

Tamperproof Screws

☐ #10 x 1-1/2" pinned flat head torx sheet metal screws **(standard)**
☐ Other _____

Locking Angles (two pieces)** -(optional)

☐ 1" x 1" x 3/16" (standard when sleeve is required)
☐ 1-1/2" x 1-1/2" x 3/16" (optional)
☐ 2" x 2" x 3/16" (optional)
☐ Other _____

**screw holes omitted when sleeve and locking angles specified

Opposed Blade Damper -(optional)

☐ Front Operated ☐ Rear Operated
☐ Other _____

Adapter -(optional)

☐ Square to round (shipped loose)

Finish

☐ White Powder Coat **(standard)**
☐ Rust Inhibiting Prime Coat (optional)
☐ Other _____

Other Options (please specify)

_____

Qty.	Order Size (Nominal Duct)		Sleeve Length
	W"	x H"	D

All dimensions are in inches.

SUBMITTAL APPROVAL

Job Name and Location			
Engineer	Date	Factory	Date
Mfr. Rep.	Date	Submitted By	Date